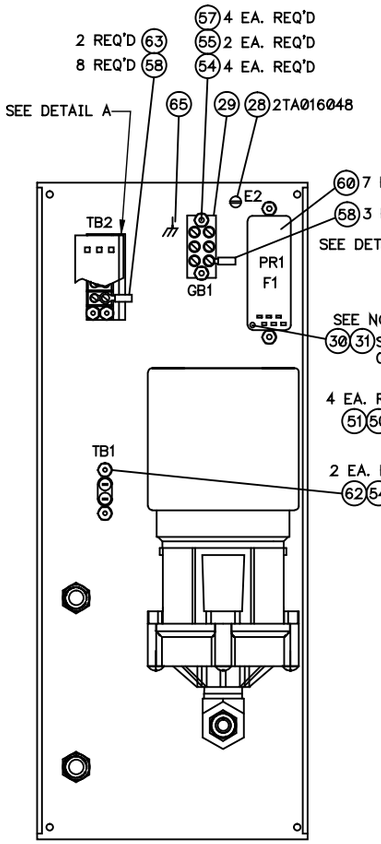

INSIDE VIEW OF REAR PANEL

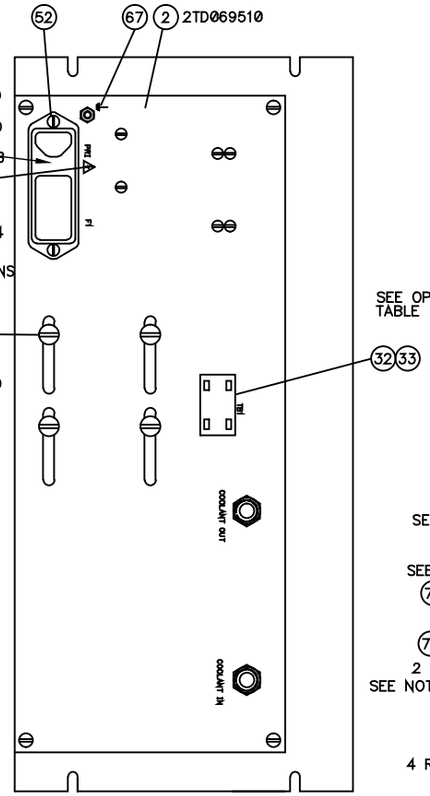

REAR VIEW

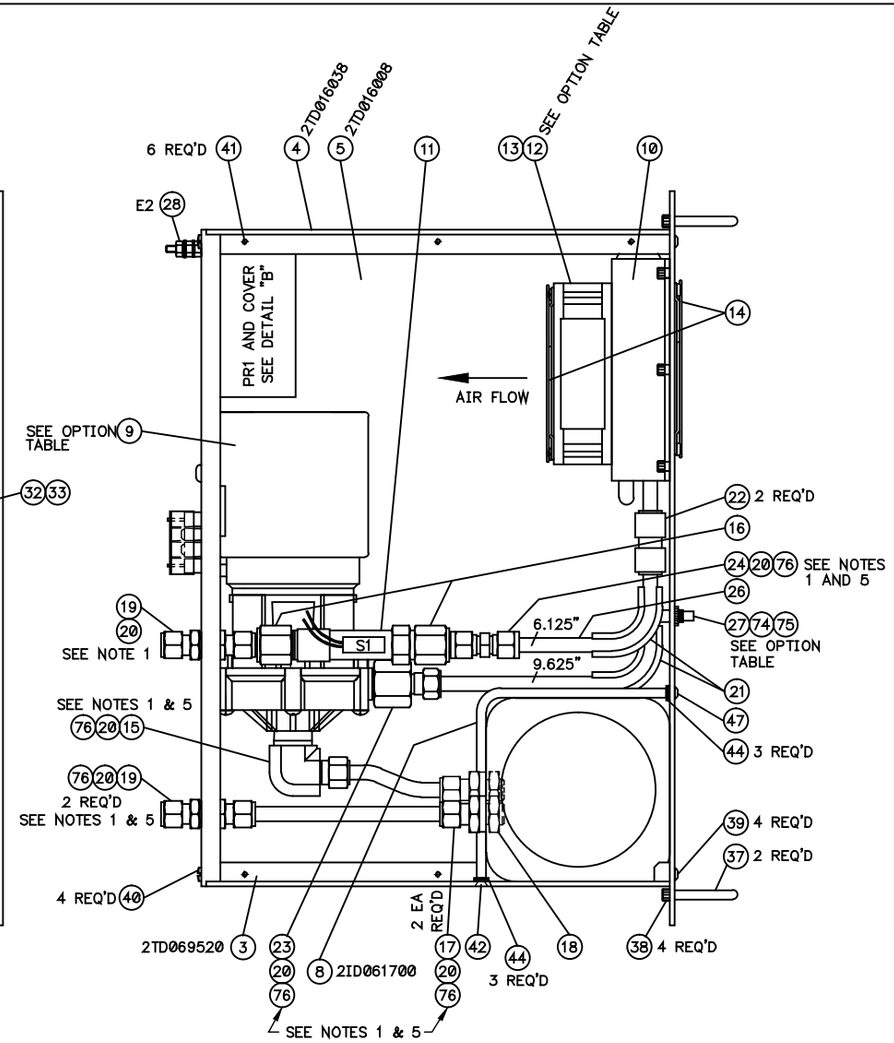

TOP VIEW

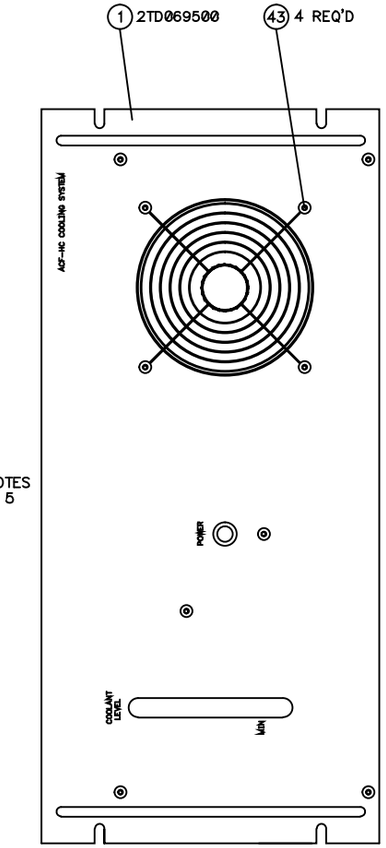

FRONT VIEW

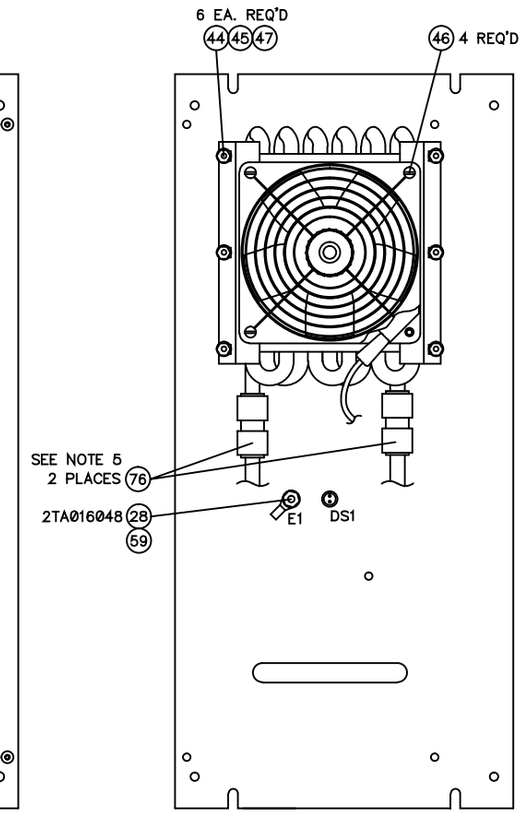

INSIDE VIEW OF FRONT PANEL

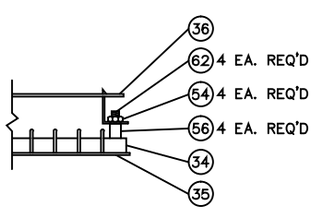

DETAIL A

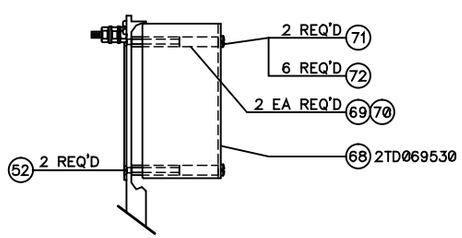

DETAIL B
PR1 INTERNAL COVER

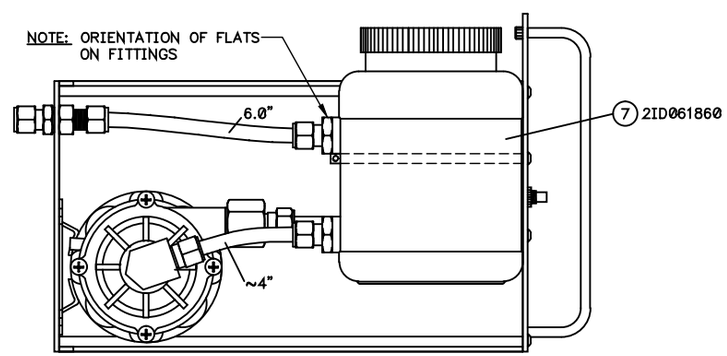

SIDE VIEW

NOTES:

1) REPLACE ALL 3/8" SWAGELOK BRASS FERRULES EXCEPT S1 JUNCTION WITH NYLON FERRULES (ITEM 20). DO NOT OVER TIGHTEN.
2) OPTION 0 PUMP (120VAC) IS INSTALLED IN MOUNTING HOLES AS SHOWN. OPTION 1 PUMP (240VAC) USES OTHER SET.
3) ITEMS 48,73 NOT USED.
4) SET VOLTAGE SELECTOR ON PR1 (ITEM 30) AS PER OPTION.
5.) PLACE SOFT TUBE INSERTS (ITEM 76) INTO POLYURETHANE TUBING ENDS, 8 PLACES. BEFORE INSTALLING INSERTS, SLIDE NUT FROM CONNECTORS AND FERRULES (ITEM 20) ONTO TUBING.

INSTALL	8HQ370116	8HR370001	8ER000032	3QE000029	2IA061461
NOT USED	8HQ370112	8HR210015	8ER000002	3QE000041	2IA061460
ITEMS 74,75	ITEM 31	ITEM 27	ITEM 12	ITEM 9	ASSEMBLY P/N

OPTION TABLE

NO.	REVISION	BY	DATE	CKD	DATE
I	UPDATED #2, 7 & 68	MAM	12/18	JMK	12/18
H	ADDED NOTES 4 AND 5 AND ITEM 76	NLP	3/27/17	JMK	3/27/17
G	#7 WAS 2ID061690/ITEMS 6 & 25 NOT USED/EDIT QTY #17 & 18	BMB	1/5/17	JMK	1/5/17
F	MODIFIED NOTE 4	NLP	1/29/16	AJG	1/29/16
E	ADDED NOTE 4	NLP	6/13	MAS	6/13
D	FLIPPED PR1 (180°)	BMB	6/11	MAS	6/11
C	ADDED #74 & 75; #68 WAS 2TD064661	MAM	3/09	AJG	3/6/09
B	ADDED QUANITY DETAILS	NLP	2/5/09	PJO	2/5/09
A	GEN REVISIONS	MAM	7/07	AJG	7/13/07

TOLERANCES AND FINISH UNLESS OTHERWISE SPECIFIED
FRACTIONAL ±1/64° | .XXX ±.005 | ANGLE ±.5° | MACH 125√ | THIRD ANGLE PROJECTION
MATERIAL: SEE PARTS LIST

DRAWN	NLP	2/28/07
CHECKED	JTN	
DESIGNED	JBS	
SCALE	1=2	
PART NO.	SEE OPTION TABLE	

NATIONAL ELECTROSTATICS CORPORATION
MIDDLETON, WISCONSIN

ACF-HC COOLING SYSTEM – ASSEMBLY

D | DWG NO. 9-0-6146 | LOC CV